TABLE OF CONTENTS

RIDGE

HIGH PROFILE

EG6010 - RIDGE (HIGH PROFILE)

EG6020 - RIDGE - PURLIN INSULATION PAN (HIGH PROFILE)

EG6030 - RIDGE - JOIST INSULATION PAN (HIGH PROFILE)

EG6090 - RIDGE VENT DETAIL AT SS360

EG6090 - RIDGE VENT DETAIL AT SSII

EG6095 - VENTED RIDGE TRIM DETAIL (HIGH PROFILE)

LOW PROFILE

EG6011 - RIDGE TRIM (LOW PROFILE)

EG6021 - RIDGE - PURLIN INSULATION PAN (LOW PROFILE)

EG6031 - RIDGE - JOIST INSULATION PAN (LOW PROFILE)

EG6096 - VENTED RIDGE TRIM DETAIL (LOW PROFILE)

EG6010 - RIDGE

Download the DWG file by clicking here.

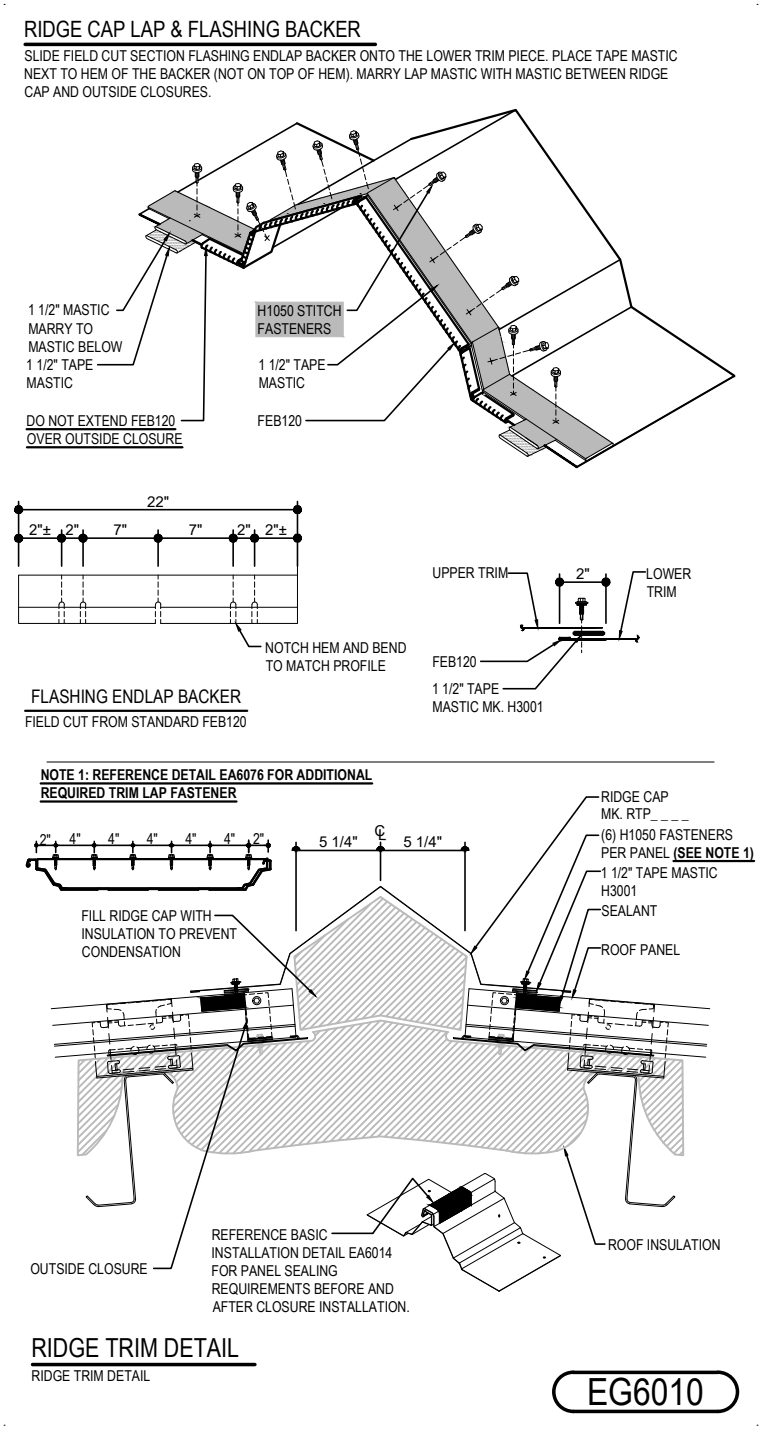

Detailer Notes:

1) N/A

EG6020 - RIDGE - PURLIN INSULATION PAN

Download the DWG file by clicking here.

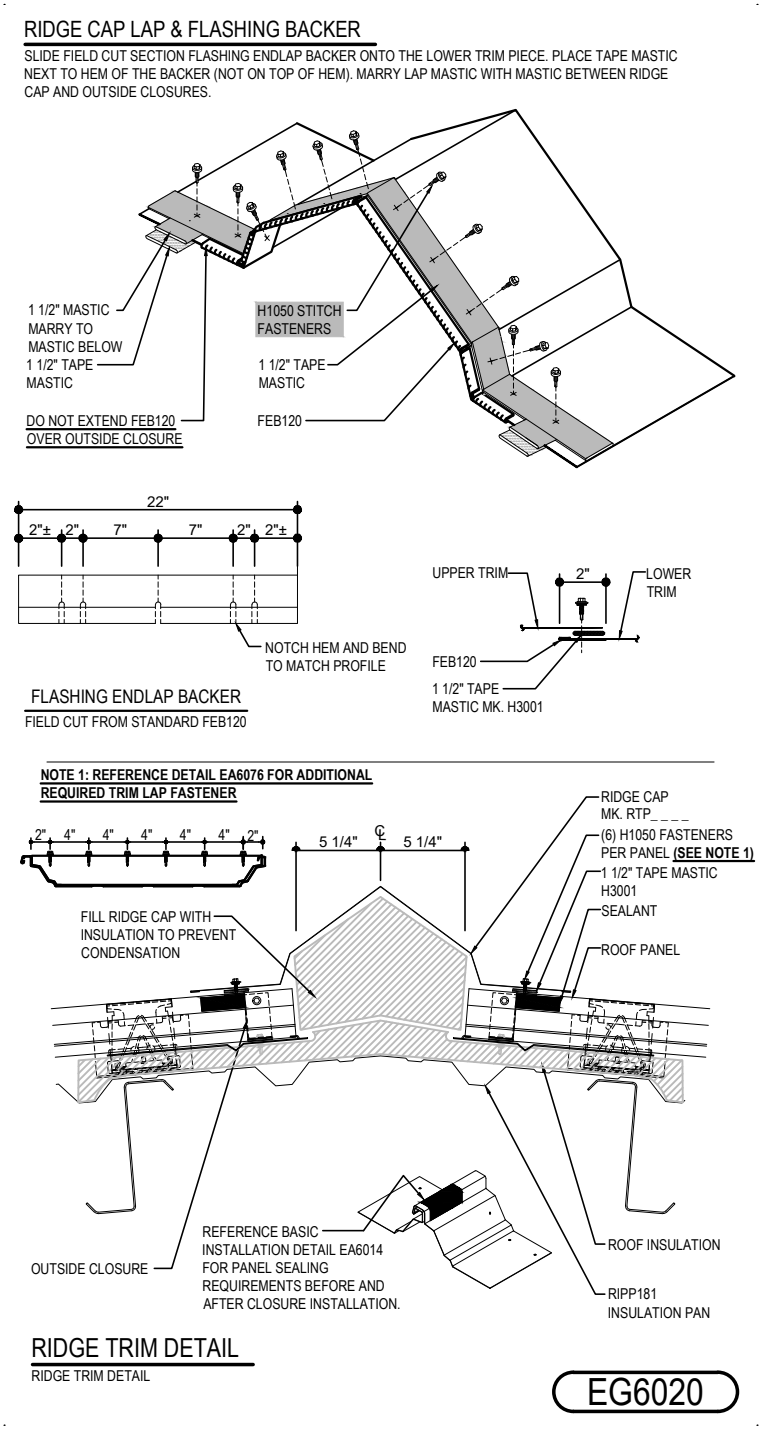

Detailer Notes:

1) N/A

EG6030 - RIDGE - JOIST INSULATION PAN

Download the DWG file by clicking here.

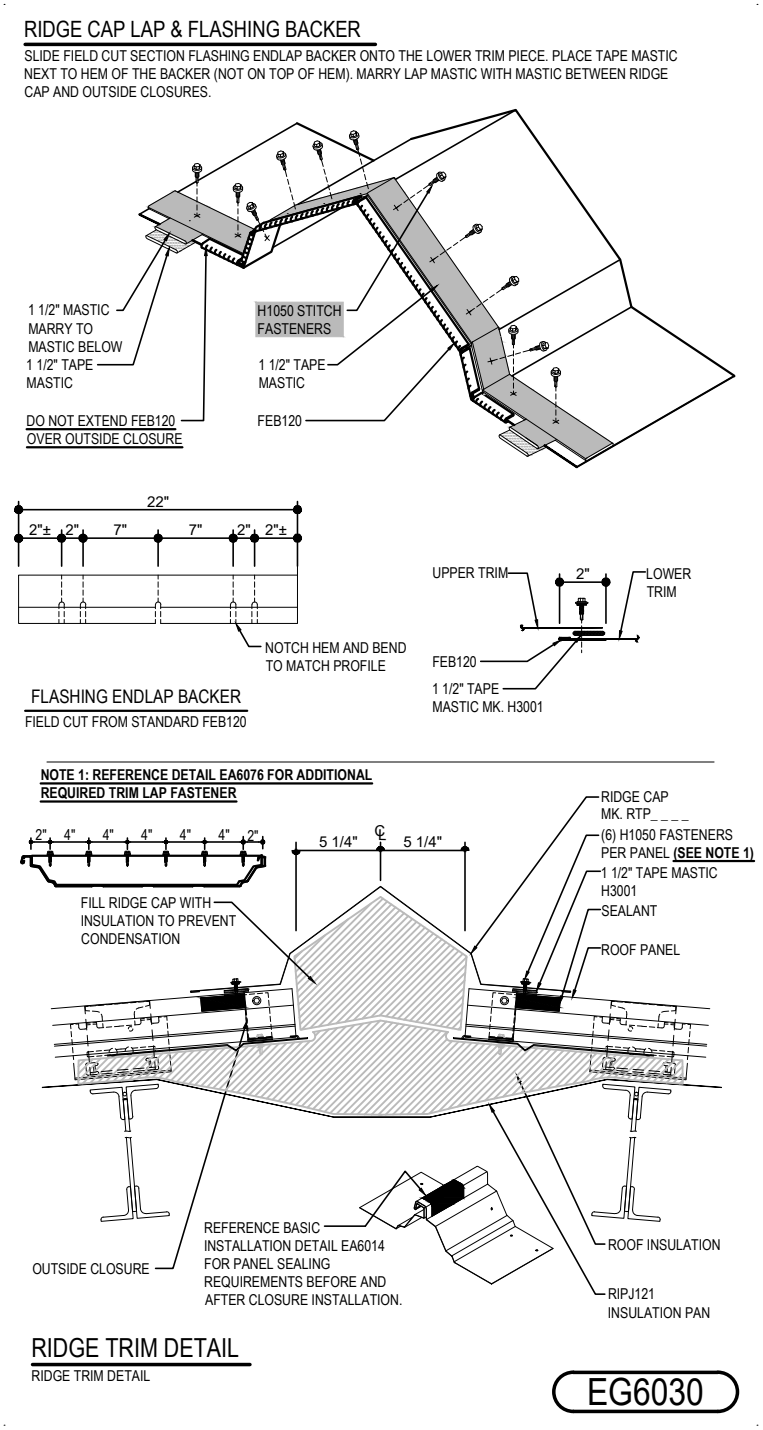

Detailer Notes:

1) N/A

EG6090 - RIDGE VENT DETAIL AT SS360

Download the DWG file by clicking here.

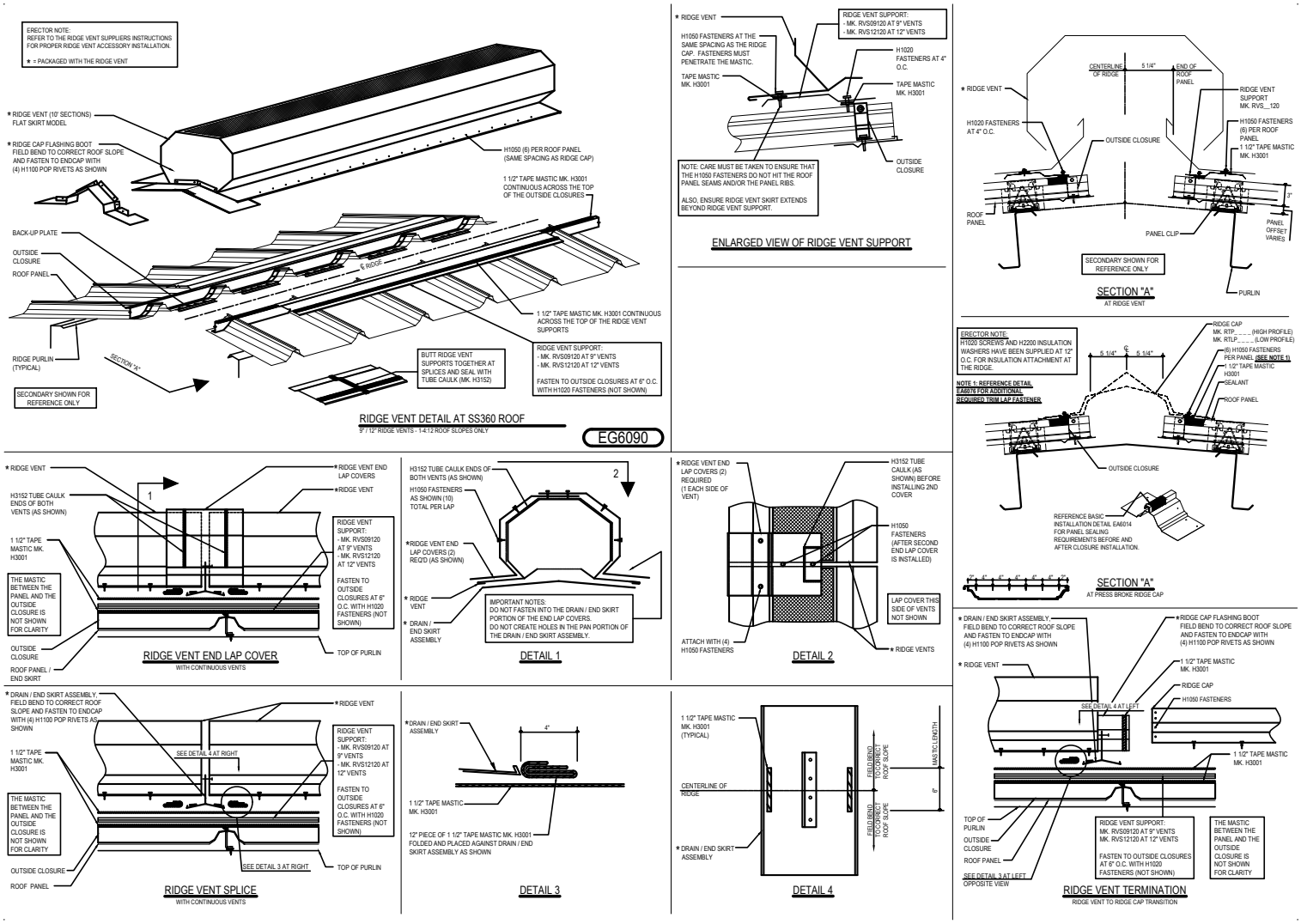

Detailer Notes:

EG6090 - RIDGE VENT DETAIL AT SSII

Download the DWG file by clicking here.

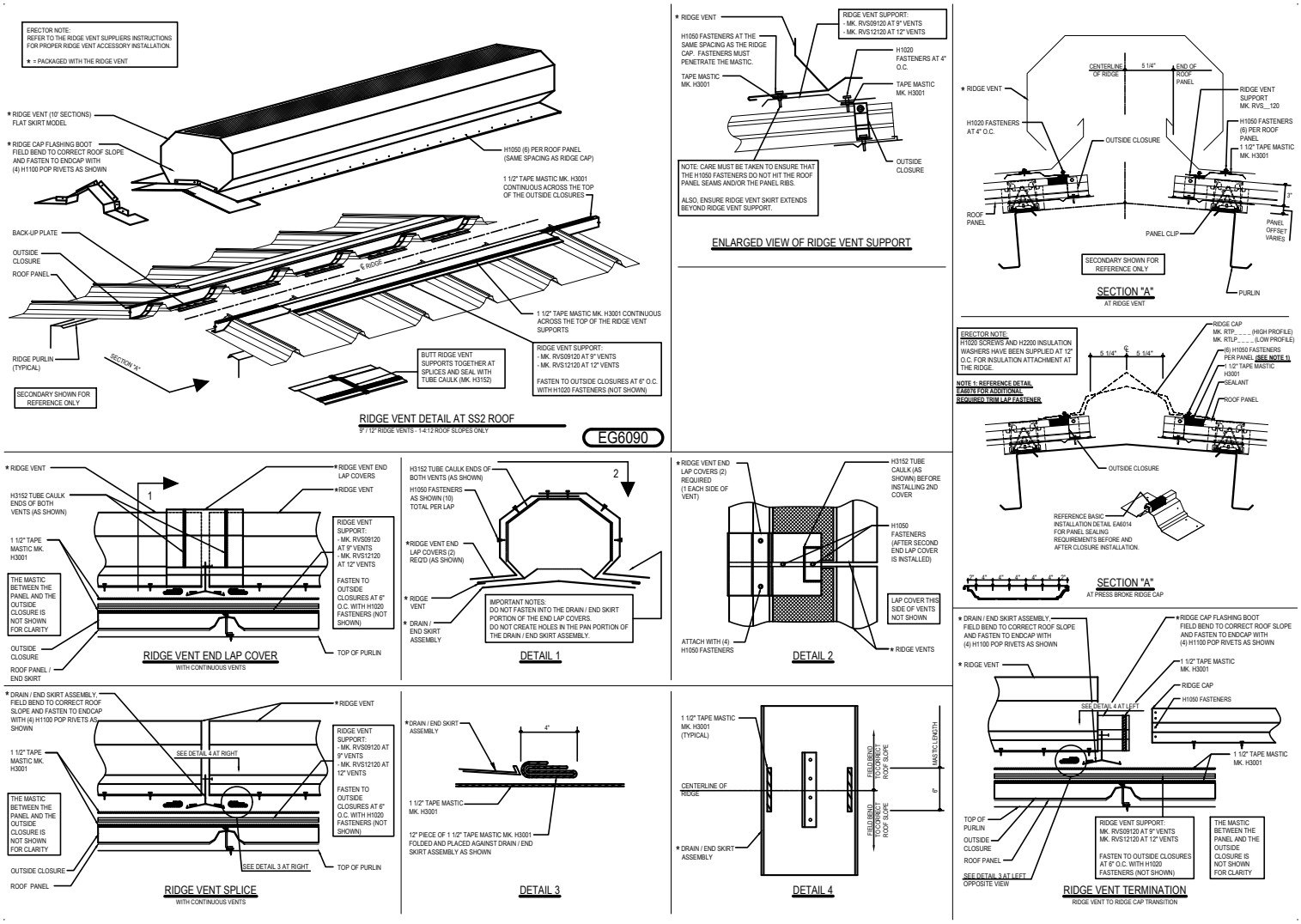

Detailer Notes:

EG6095 - VENTED RIDGE TRIM DETAIL

Download the DWG file by clicking here.

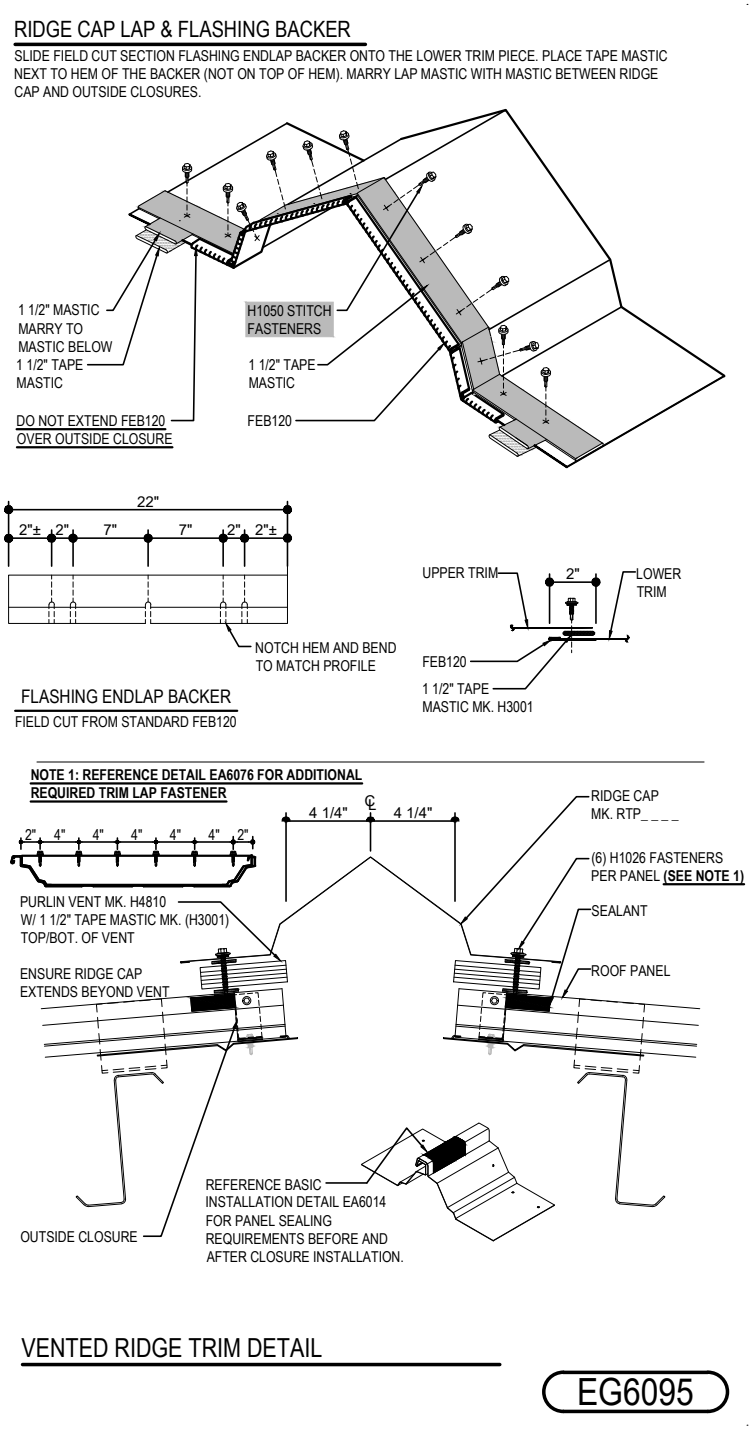

Detailer Notes:

1) N/A

EG6011 - RIDGE TRIM (LOW PROFILE)

Download the DWG file by clicking here.

RIDGE CAP LAP & FLASHING BACKER

SLIDE FIELD CUT SECTION FLASHING ENDLAP BACKER ONTO THE LOWER TRIM PIECE. PLACE TAPE MASTIC NEXT TO HEM OF THE BACKER (NOT ON TOP OF HEM). MARRY LAP MASTIC WITH MASTIC BETWEEN RIDGE CAP AND OUTSIDE CLOSURES.

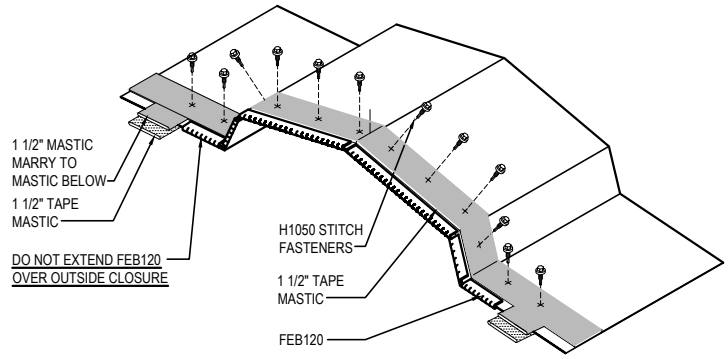

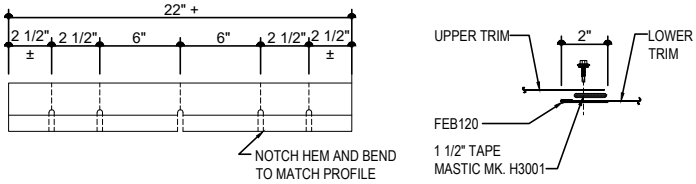

FLASHING ENDLAP BACKER

FIELD CUT FROM STANDARD FEB120

NOTE 1: REFERENCE DETAIL EA6076 FOR ADDITIONAL REQUIRED TRIM LAP FASTENER

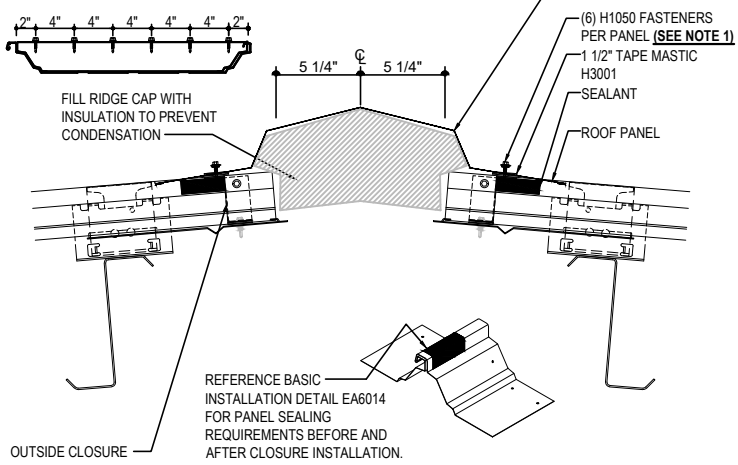

RIDGE TRIM DETAIL (LOW PROFILE)

EG6011

Detailer Notes:

1) N/A

EG6021 - RIDGE - PURLIN INSULATION PAN (LOW PROFILE)

Download the DWG file by clicking here.

RIDGE CAP LAP & FLASHING BACKER

SLIDE FIELD CUT SECTION FLASHING ENDLAP BACKER ONTO THE LOWER TRIM PIECE. PLACE TAPE MASTIC NEXT TO HEM OF THE BACKER (NOT ON TOP OF HEM). MARRY LAP MASTIC WITH MASTIC BETWEEN RIDGE CAP AND OUTSIDE CLOSURES.

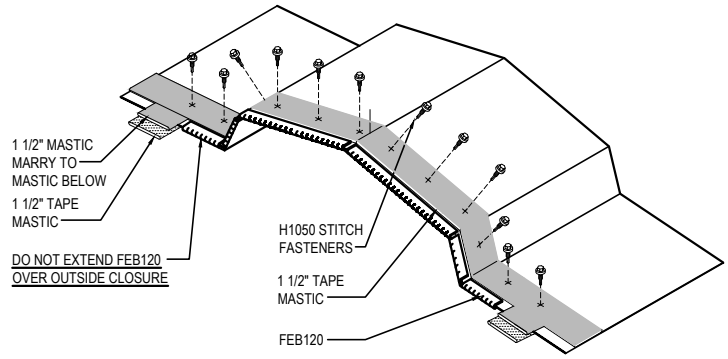

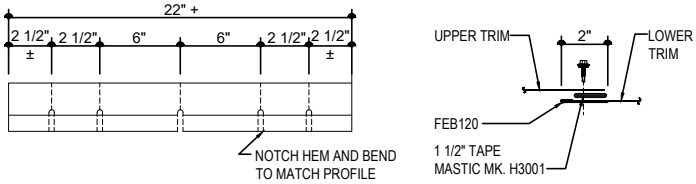

FLASHING ENDLAP BACKER

FIELD CUT FROM STANDARD FEB120

NOTE 1: REFERENCE DETAIL EA6076 FOR ADDITIONAL REQUIRED TRIM LAP FASTENER

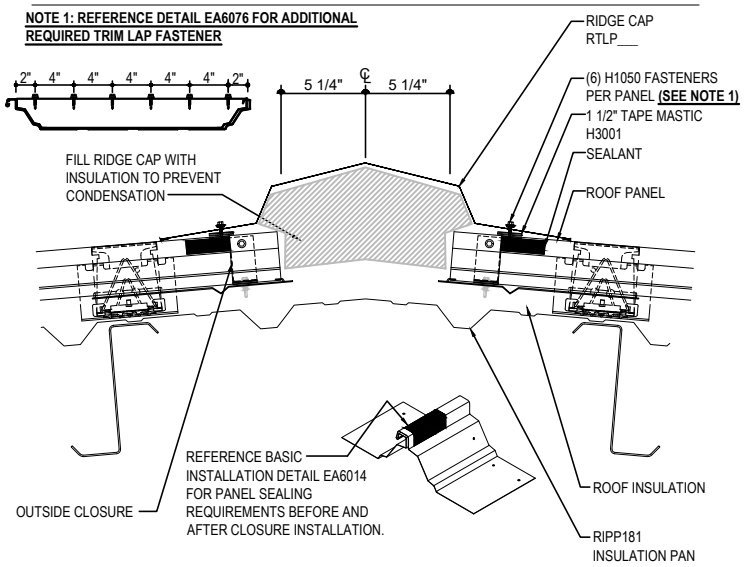

RIDGE TRIM DETAIL (LOW PROFILE)

EG6021

Detailer Notes:

1) N/A

EG6031 - RIDGE - JOIST INSULATION PAN (LOW PROFILE)

Download the DWG file by clicking here.

RIDGE CAP LAP & FLASHING BACKER

SLIDE FIELD CUT SECTION FLASHING ENDLAP BACKER ONTO THE LOWER TRIM PIECE. PLACE TAPE MASTIC NEXT TO HEM OF THE BACKER (NOT ON TOP OF HEM). MARRY LAP MASTIC WITH MASTIC BETWEEN RIDGE CAP AND OUTSIDE CLOSURES.

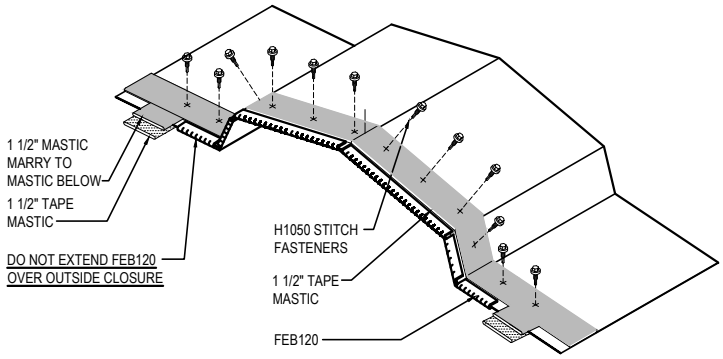

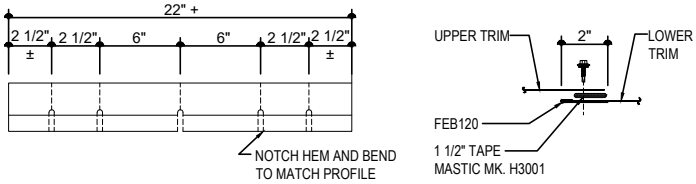

FLASHING ENDLAP BACKER

FIELD CUT FROM STANDARD FEB120

NOTE 1: REFERENCE DETAIL EA6076 FOR ADDITIONAL REQUIRED TRIM LAP FASTENER

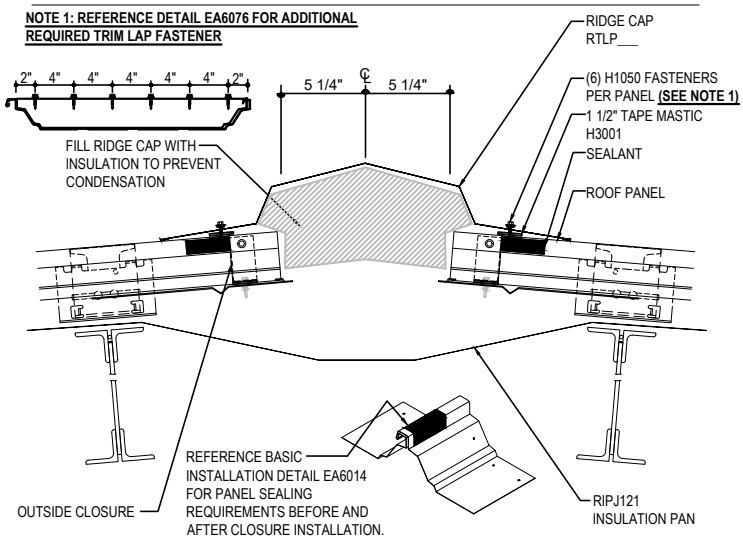

RIDGE TRIM DETAIL (LOW PROFILE)

EG6031

Detailer Notes:

1) N/A

EG6096 - VENTED RIDGE TRIM DETAIL (LOW PROFILE)

Download the DWG file by clicking here.

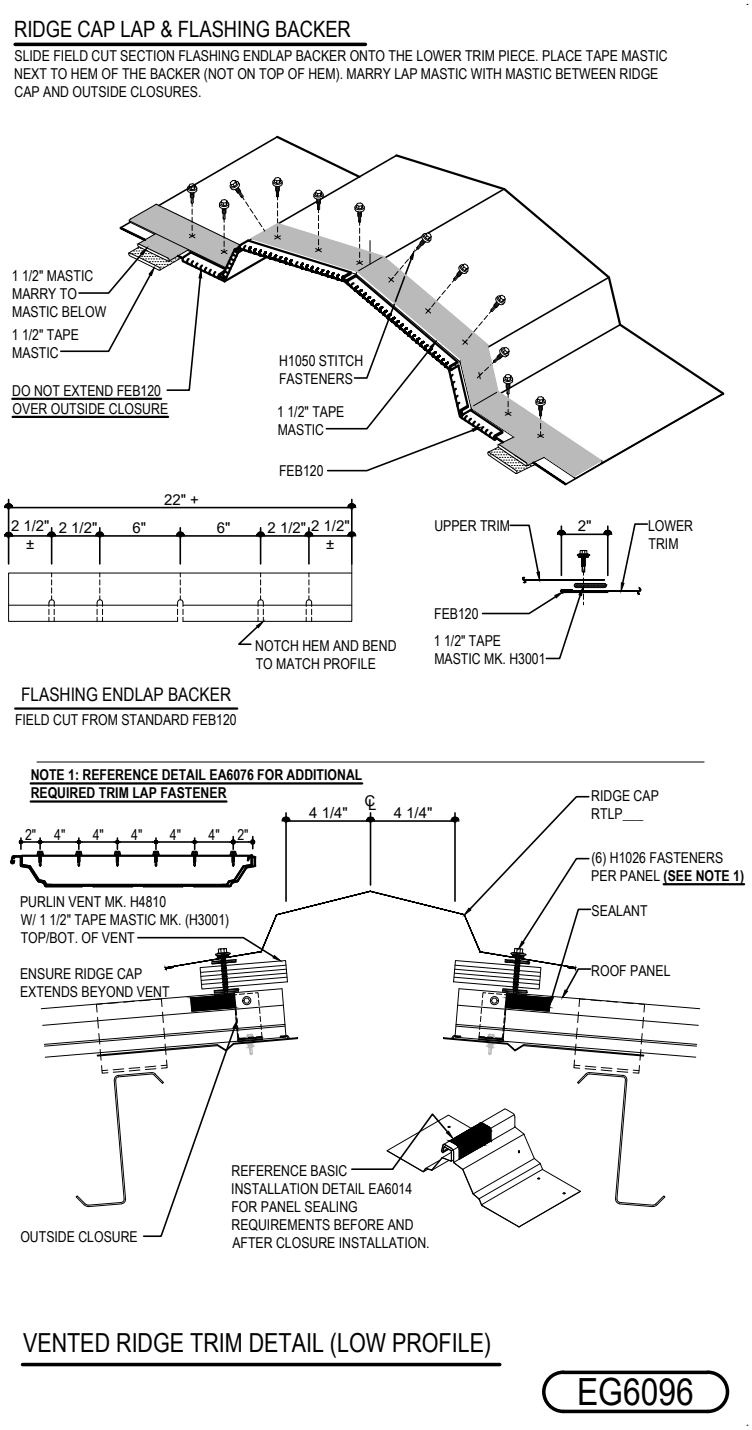

Detailer Notes:

1) N/A