TABLE OF CONTENTS

HIGH EAVE (SCULPTURED)

DH0006 - HE MEMBER w WALL PANEL
DH0007 - HE MEMBER w WALL PANEL
DH0020 - HE MEMBER AT MASONRY WALL
DH0025 - HE MEMBER w NO WALL PANEL
DH0026 - HE MEMBER w NO WALL PANEL
DH0035 - HE MEMBER w PARTIAL WIDTH WALL PANEL
DH0036 - HE MEMBER w PARTIAL WIDTH WALL PANEL

DH0006 - HIGH EAVE SCULPTURED W/ WALL PANEL

Download the DWG file by clicking here.

HIGH EAVE LAP & FLASHING BACKER

SLIDE FIELD CUT SECTION FLASHING ENDLAP BACKER ONTO THE LOWER TRIM PIECE. PLACE TAPE MASTIC NEXT TO HEM OF THE BACKER (NOT ON TOP OF HEM). APPLY CONTINUOUS BEAD OF CAULK 1" FROM END OF TRIM DOWN PROFILE OF TRIM. FASTEN LAP WITH STITCH FASTENERS AND POP RIVETS AS SHOWN.

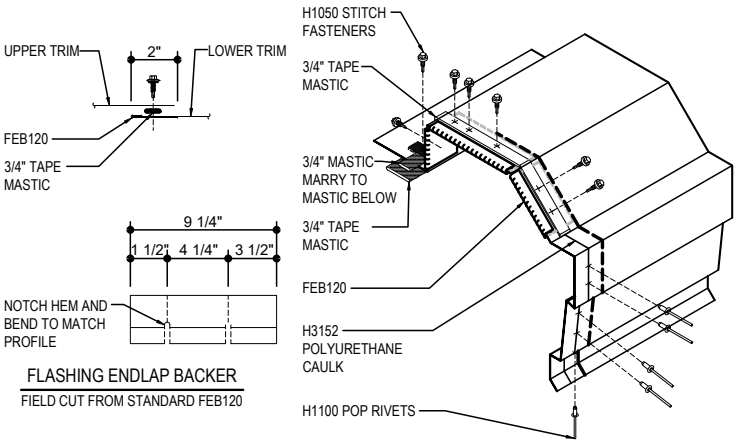

FLASHING ENDLAP BACKER

FIELD CUT FROM STANDARD FEB120

ERECTOR NOTE:
H1020 FASTENERS (PURLINS) & H1070 FASTENERS (JOISTS) WITH H2200 INSULATION WASHERS HAVE BEEN SUPPLIED 12" O.C. FOR INSULATION ATTACHMENT AT RIDGE.

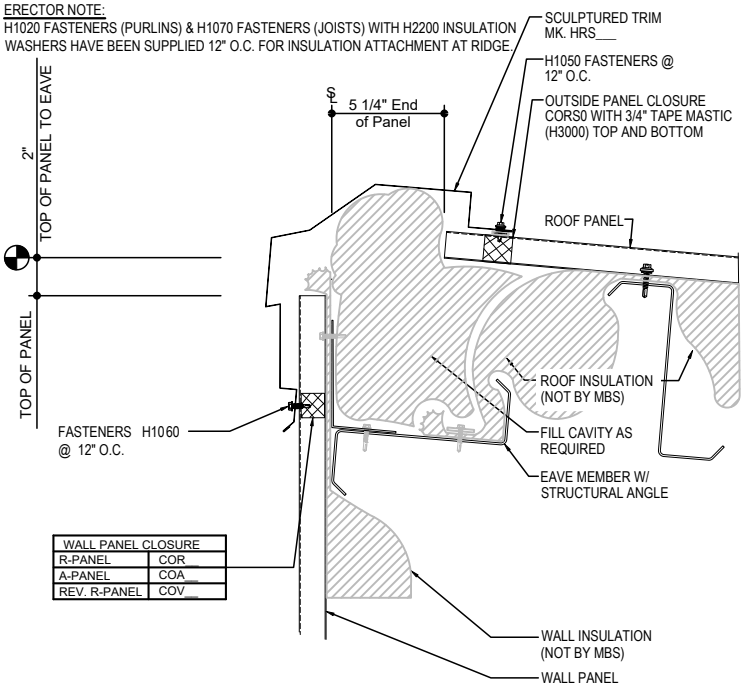

WALL PANEL CLOSURE	
R-PANEL	COR__
A-PANEL	COA__
REV. R-PANEL	COV__

HIGH EAVE SCULPTURED DETAIL

HIGH EAVE SCULPTURED DETAIL w/ R-Panel ROOF & WALL PANELS
SEE WALL SHEETING ERECTION NOTES FOR WALL PANEL FASTENER LOCATIONS

DH0006

Detailer Notes:

1) CLOSURES HIGH EAVE LAYER DEFAULT IS ON. LAYER MUST BE TURNED OFF IF CLOSURES ARE NOT REQUIRED.
2) THIS DETAIL SHOULD NOT BE USED WITH HIGH SIDE EAVE STRUTS. SEE DH0007 WHEN HIGH EAVE STRUTS ARE BEING USED.

DH0007 - HIGH EAVE SCULPTURED W/ WALL PANEL

Download the DWG file by clicking here.

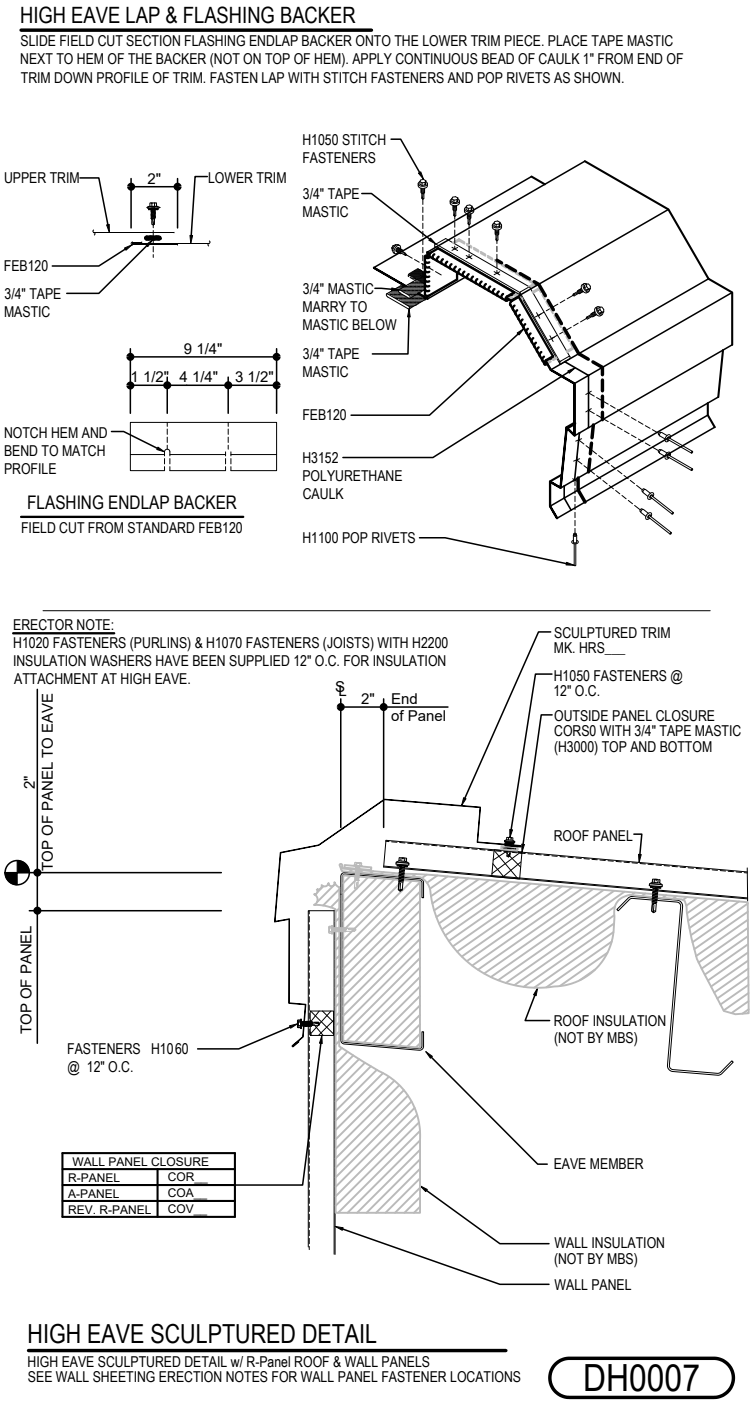

Detailer Notes:

1) CLOSURES HIGH EAVE LAYER DEFAULT IS ON. LAYER MUST BE TURNED OFF IF CLOSURES ARE NOT REQUIRED.

DH0020 - HIGH EAVE SCULPTURED AT MASONRY WALL

Download the DWG file by clicking here.

HIGH EAVE LAP & FLASHING BACKER

SLIDE FIELD CUT SECTION FLASHING ENDLAP BACKER ONTO THE LOWER TRIM PIECE. PLACE TAPE MASTIC NEXT TO HEM OF THE BACKER (NOT ON TOP OF HEM). APPLY CONTINUOUS BEAD OF CAULK 1" FROM END OF TRIM DOWN PROFILE OF TRIM. FASTEN LAP WITH STITCH FASTENERS AND POP RIVETS AS SHOWN.

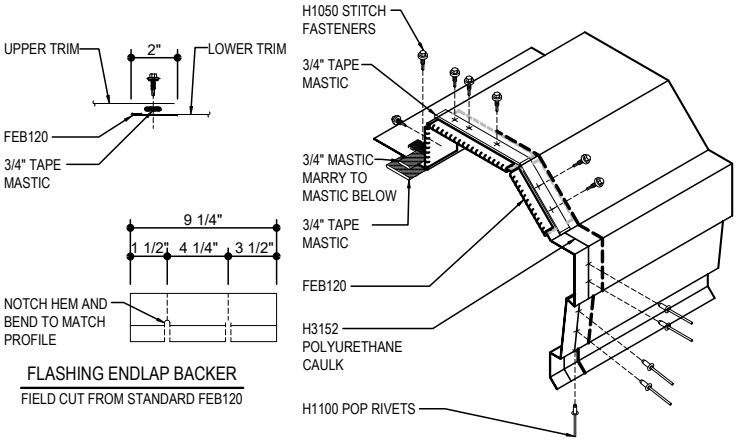

FLASHING ENDLAP BACKER

FIELD CUT FROM STANDARD FEB120

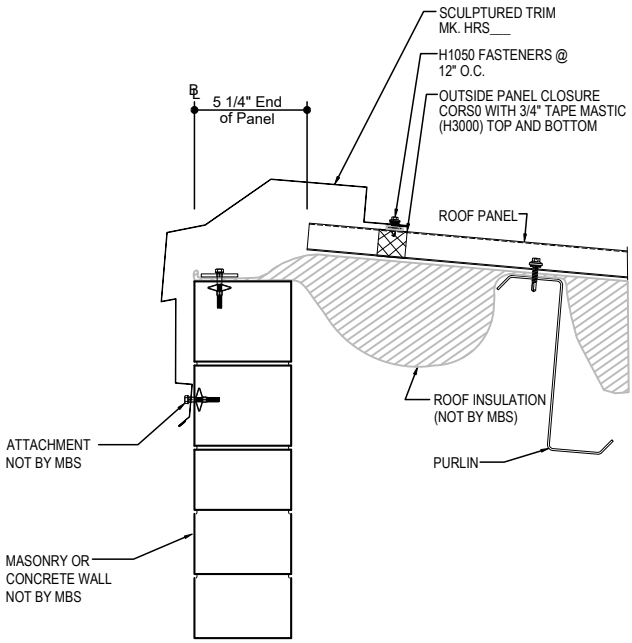

HIGH EAVE SCULPTURED DETAIL

HIGH EAVE SCULPTURED DETAIL w/ R-Panel ROOF AT MASONRY WALL
SEE WALL SHEETING ERECTION NOTES FOR WALL PANEL FASTENER LOCATIONS

DH0020

Detailer Notes:

1) N/A

DH0025 - HIGH EAVE SCULPTURED W/ NO WALL PANEL

Download the DWG file by clicking here.

HIGH EAVE LAP & FLASHING BACKER

SLIDE FIELD CUT SECTION FLASHING ENDLAP BACKER ONTO THE LOWER TRIM PIECE. PLACE TAPE MASTIC NEXT TO HEM OF THE BACKER (NOT ON TOP OF HEM). APPLY CONTINUOUS BEAD OF CAULK 1" FROM END OF TRIM DOWN PROFILE OF TRIM. FASTEN LAP WITH STITCH FASTENERS AND POP RIVETS AS SHOWN.

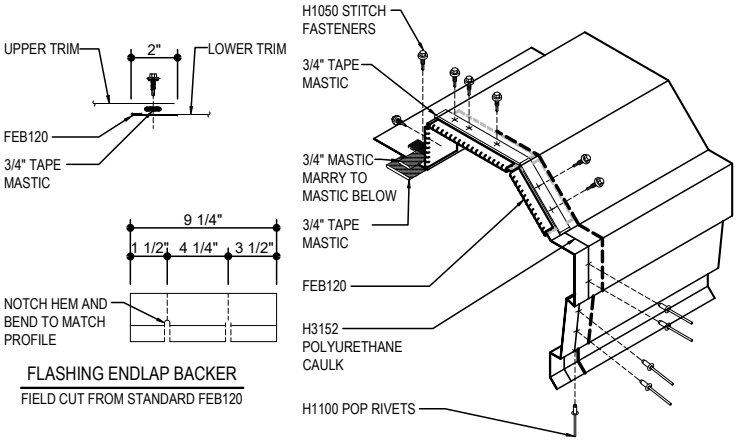

FLASHING ENDLAP BACKER

FIELD CUT FROM STANDARD FEB120

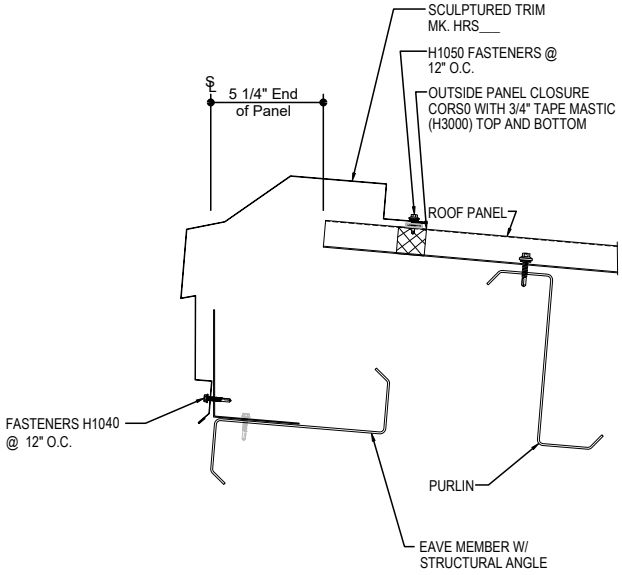

HIGH EAVE SCULPTURED DETAIL

HIGH EAVE SCULPTURED DETAIL w/ R-Panel ROOF & NO WALL PANELS
SEE WALL SHEETING ERECTION NOTES FOR WALL PANEL FASTENER LOCATIONS

DH0025

Detailer Notes:

1) THIS DETAIL SHOULD NOT BE USED WITH HIGH SIDE EAVE STRUTS.
   SEE DH0026 WHEN HIGH EAVE STRUTS ARE BEING USED.

DH0026 - HIGH EAVE SCULPTURED W/ NO WALL PANEL

Download the DWG file by clicking here.

HIGH EAVE LAP & FLASHING BACKER

SLIDE FIELD CUT SECTION FLASHING ENDLAP BACKER ONTO THE LOWER TRIM PIECE. PLACE TAPE MASTIC NEXT TO HEM OF THE BACKER (NOT ON TOP OF HEM). APPLY CONTINUOUS BEAD OF CAULK 1" FROM END OF TRIM DOWN PROFILE OF TRIM. FASTEN LAP WITH STITCH FASTENERS AND POP RIVETS AS SHOWN.

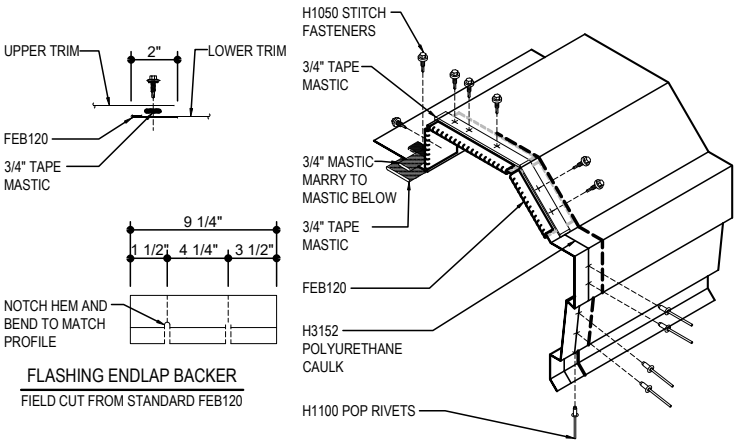

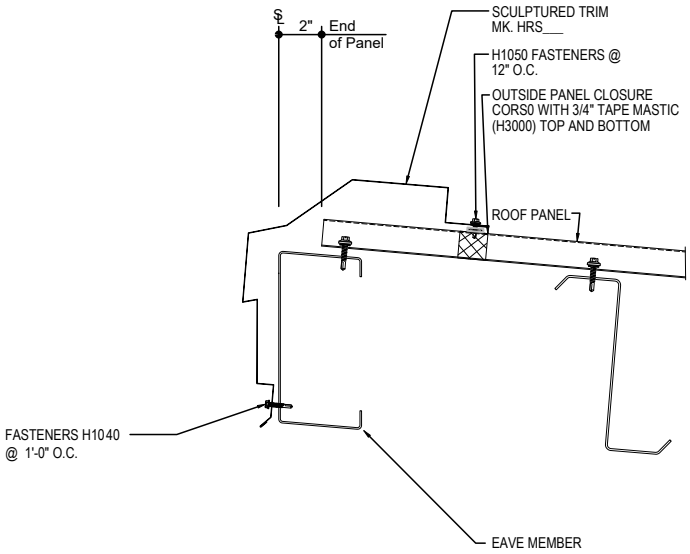

HIGH EAVE SCULPTURED DETAIL

HIGH EAVE SCULPTURED DETAIL w/ R-Panel ROOF NO WALL PANELS
SEE WALL SHEETING ERECTION NOTES FOR WALL PANEL FASTENER LOCATIONS

DH0026

Detailer Notes:

1) N/A

DH0035 - HIGH EAVE SCULPTURED W/ PARTIAL WIDTH WALL PANEL

Download the DWG file by clicking here.

HIGH EAVE LAP & FLASHING BACKER

SLIDE FIELD CUT SECTION FLASHING ENDLAP BACKER ONTO THE LOWER TRIM PIECE. PLACE TAPE MASTIC NEXT TO HEM OF THE BACKER (NOT ON TOP OF HEM). APPLY CONTINUOUS BEAD OF CAULK 1" FROM END OF TRIM DOWN PROFILE OF TRIM. FASTEN LAP WITH STITCH FASTENERS AND POP RIVETS AS SHOWN.

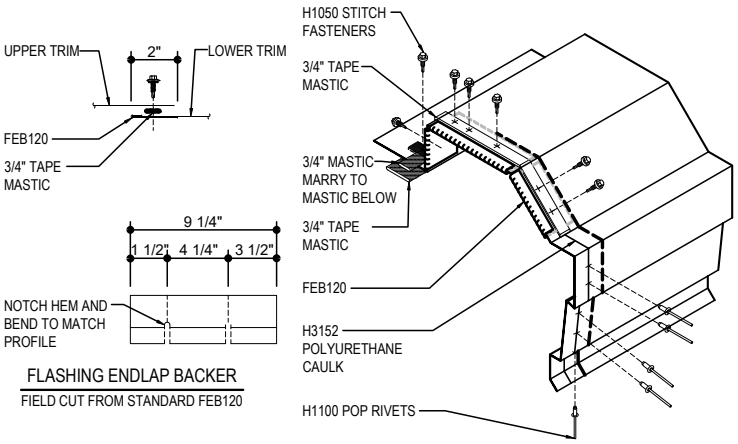

ERECTOR NOTE:
H1020 FASTENERS (PURLINS) & H1070 FASTENERS (JOISTS) WITH H2200 INSULATION WASHERS HAVE BEEN SUPPLIED 12" O.C. FOR INSULATION ATTACHMENT AT HIGH EAVE.

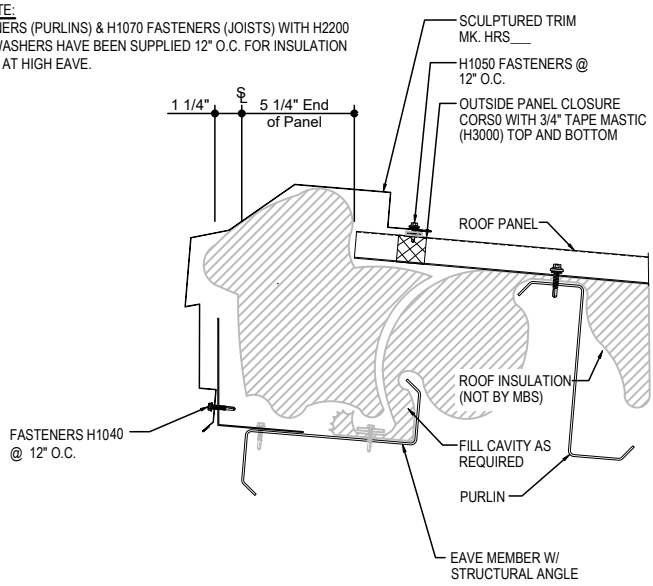

HIGH EAVE SCULPTURED DETAIL

HIGH EAVE SCULPTURED DETAIL w/ R-Panel ROOF w/ PARTIAL WIDTH WALL PANEL
SEE WALL SHEETING ERECTION NOTES FOR WALL PANEL FASTENER LOCATIONS

DH0035

Detailer Notes:

1) THIS DETAIL SHOULD NOT BE USED WITH HIGH SIDE EAVE STRUTS.
SEE DH0036 WHEN HIGH EAVE STRUTS ARE BEING USED.

DH0036 - HIGH EAVE SCULPTURED W/ PARTIAL WIDTH WALL PANEL

Download the DWG file by clicking here.

HIGH EAVE LAP & FLASHING BACKER

SLIDE FIELD CUT SECTION FLASHING ENDLAP BACKER ONTO THE LOWER TRIM PIECE. PLACE TAPE MASTIC NEXT TO HEM OF THE BACKER (NOT ON TOP OF HEM). APPLY CONTINUOUS BEAD OF CAULK 1" FROM END OF TRIM DOWN PROFILE OF TRIM. FASTEN LAP WITH STITCH FASTENERS AND POP RIVETS AS SHOWN.

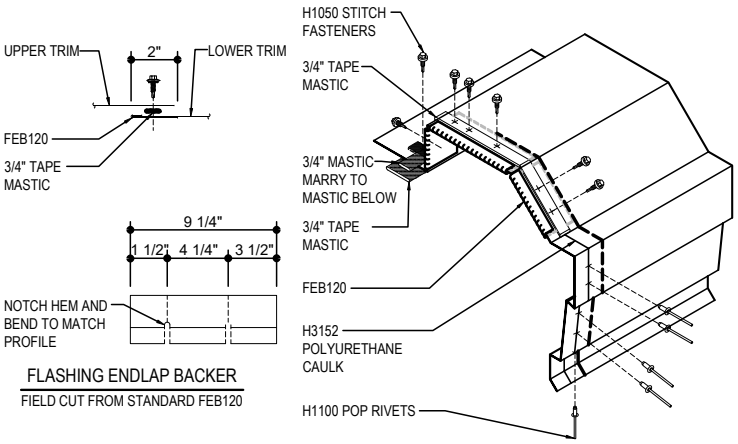

FLASHING ENDLAP BACKER

FIELD CUT FROM STANDARD FEB120

ERECTOR NOTE:
H1020 FASTENERS (PURLINS) & H1070 FASTENERS (JOISTS) WITH H2200 INSULATION WASHERS HAVE BEEN SUPPLIED 12" O.C. FOR INSULATION ATTACHMENT AT HIGH EAVE.

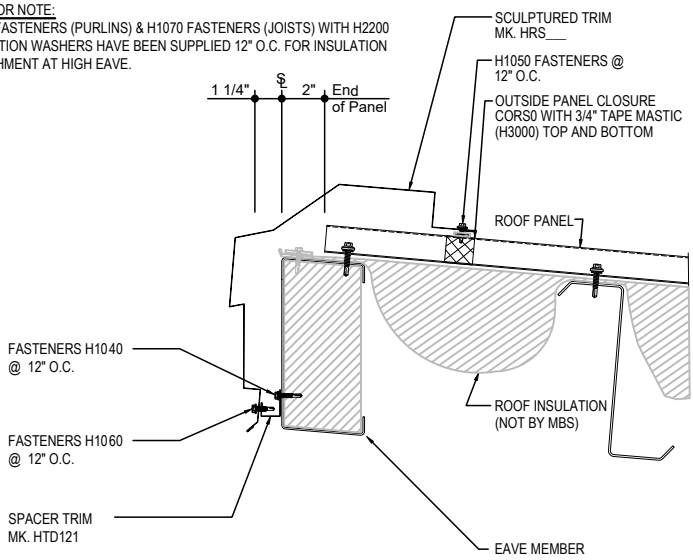

HIGH EAVE SCULPTURED DETAIL

HIGH EAVE SCULPTURED DETAIL w/ R-Panel ROOF w PARTIAL WIDTH WALL PANEL
SEE WALL SHEETING ERECTION NOTES FOR WALL PANEL FASTENER LOCATIONS

DH0036

Detailer Notes:

1) N/A