TABLE OF CONTENTS

HIGH EAVE (PARAPET)

EI7350 - HE PARAPET WITH RAKE TERM AT CORNER - OUTSIDE - VR
EI7351 - HE PARAPET TO RAKE PARAPET - OUTSIDE - VERTICAL RIB
EI7380 - HE PARAPET WITH RAKE TERM - INSIDE - VR
EI7381 - HE PARAPET TO RAKE PARAPET - INSIDE - VERTICAL RIB
EI7650 - HE PARAPET WITH RAKE TERM AT CORNER - OUTSIDE - TRAP
EI7651 - HE PARAPET TO RAKE PARAPET - OUTSIDE - TRAP
EI7680 - HE PARAPET WITH RAKE TERM - INSIDE - TRAP
EI7681 - HE PARAPET TO RAKE PARAPET - INSIDE - TRAP

EI7350 ABC - HIGH EAVE PARAPET WITH RAKE TERMINATION AT CORNER - OUTSIDE - VERTICAL RIB

Download the DWG file by clicking here.

HIGH EAVE PARAPET WITH RAKE TERMINATION AT CORNER

RAKE TERMINATION AT WALL
STEP 1

EXTEND THE RAKE TRIM TO STEEL LINE WHERE THE PROFILE WILL LAP APPROXIMATELY 1" ON THE WALL CORNER TRIM THAT WILL BE INSTALLED LATER. ATTACH THE RAKE TRIM END CAP **(H4000_)** INTO THE HIGH SIDE OF THE RAKE TRIM. FASTEN WITH POP RIVETS **(H1100)**. DO NOT ATTACH RAKE TRIM TO WALL UNTIL AFTER CORNER TRIM IS INSTALL. RAKE TRIM WILL NEED TO BE ROLLED OUT TO SLIDE CORNER TRIM BEHIND FACE OF RAKE TRIM.

HIGH EAVE PARAPET TRIM INSTALLATION
STEP 2

REFERENCE HIGH EAVE PARAPET DETAIL FOR TYPICAL PARAPET INSTALLATION. THE HIGH EAVE PARAPET TRIM SHOULD EXTEND ALL THE WAY OVER TO THE EDGE OF THE TOP HORIZONTAL LEG OF THE RAKE TRIM AS SHOWN. THE LOWER PORTION OF PARAPET TRIM WILL TERMINATE INTO BACK OF RAKE TRIM. BEND AND TAB AS SHOWN BELOW. USE POLYURETHANE TUBE CAULK **(H3152)** AND FASTEN THE PARAPET TRIM TO RAKE TRIM WITH **(H1050)** FASTENERS.

WALL PANEL & CORNER TRIM INSTALLATION
STEP 3

INSTALL WALL PANEL AND CORNER TRIM ACCORDING THOSE DETAILS. CORNER TRIM SHOULD EXTEND DOWN TO THE BOTTOM HORIZONTAL LEG OF THE RAKE TRIM BUT WILL NEED TO BE COPED AT THE UPPER PORTION OF THE RAKE TRIM. THE UPPER PORTION OF THE RAKE TRIM WILL NEED TO EXTEND INSIDE OF THE CORNER TRIM AS SHOWN. SEAL VOIDS WITH POLYURETHANE TUBE CAULK **(H3152)**

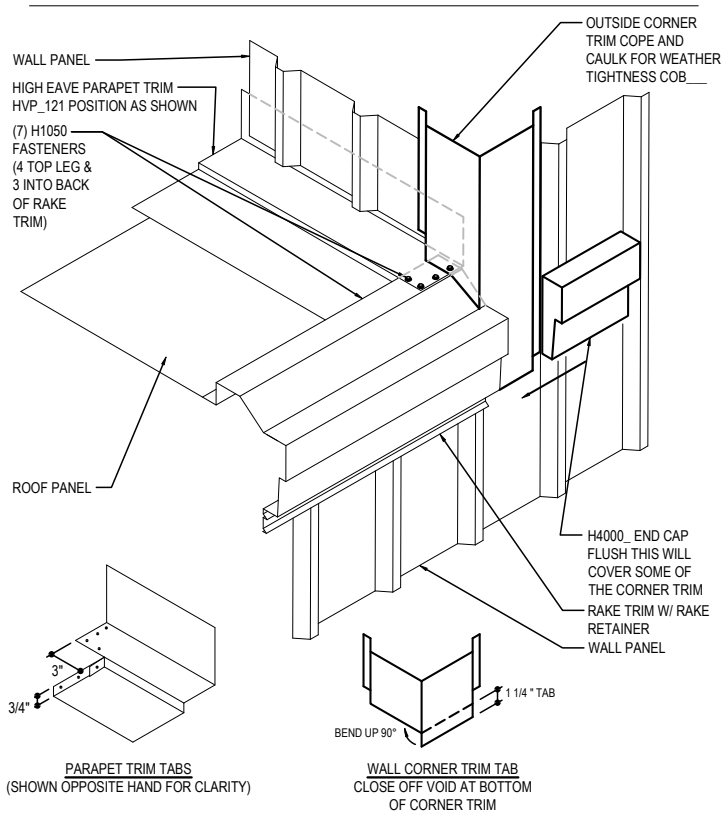

PARAPET TO RAKE TERMINATION

VERTICAL RIB ROOF WITH WALL PANEL
SEE WALL SHEETING ERECTION NOTES FOR WALL PANEL FASTENER LOCATIONS

EI7350

Detailer Notes:

1) N/A

EI7351 HIGH EAVE PARAPET TO RAKE PARAPET - OUTSIDE - VERTICAL RIB

Download the DWG file by clicking here.

PREPARATION FOR HIGH EAVE PARAPET LOWER BUILDING EXTENDS

MODIFIED ZEE CLOSURE AT PARAPET CORNER
STEP 1

FIELD CUT A SLIT AT THE LOCATION OF THE VERTICAL AND HORIZONTAL LEG OF THE RIGID ZEE CLOSURE (RVCZ122). ADDING 1" TO YOUR MEASUREMENT. PLACE THE HORIZONTAL LEG WITH 2 1/4" TAPE MASTIC (H3020) GOING UNDER PANEL AND OVER TOP OF COPED RAKE ANGLE.

SLIDE VERTICAL LEG OVER THE TOP OF THE PANEL ADD 1" TO YOUR MEASUREMENT AND BEND 90 DEGREES AS SHOWN. AT THE BENT AREA OF THE ZEE CLOSURE, REMOVE THE TOP HORIZONTAL LEG AS SHOWN. THIS WILL ALLOW THE RAKE PARAPET TRIM TO BE CLOSED OFF, AS WELL AS ATTACHED TO THE PANEL AND COPED RAKE. FASTEN THE ZEE CLOSURE TO THE COPED RAKE ANGLE, INCLUDING (1) H1050 FASTENER AT THE HORIZONTAL LEG AND COPED RAKE ANGLE.

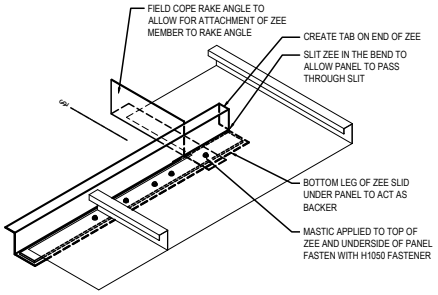

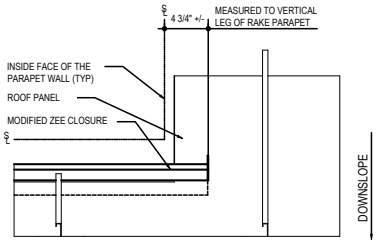

HIGH EAVE PARAPET TRIM INSTALLATION
STEP 3

BEFORE INSTALLING THE HIGH EAVE PARAPET TRIM **(HVP_121)**, PLACE TAPE MASTIC ALONG THE FULL LENGTH OF THE TOP LEG OF THE RIGID CLOSURE.

PLACE THE FLAT LEG OF THE HIGH EAVE PARAPET TRIM "FLUSH" WITH THE END OF THE RIGID CLOSURE ALONG THE ENDWALL AS SHOWN.

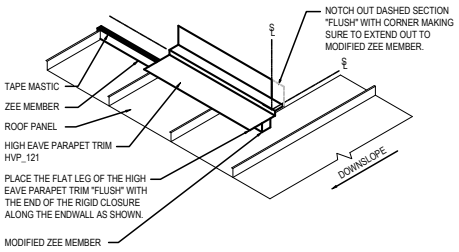

RAKE PARAPET TRIM MOCK UP TO CUT INSTALLATION
STEP 4 AND STEP 5

STEP 4: BEFORE INSTALLING THE RAKE PARAPET TRIM (RPU121), PLACE TAPE MASTIC ON TOP OF THE ROOF PANEL, FROM THE LOW END OF THE RAKE PARAPET TRIM TO THE HIGH END OF THE PANEL **(DO NOT REMOVE THE PAPER BACK FROM THE MASTIC UNTIL THE TABS IN THE RAKE PARAPET TRIM ARE CREATED).**

PLACE THE LOW END OF THE RAKE PARAPET TRIM "FLUSH" WITH THE LOW END OF THE HIGH EAVE PARAPET TRIM AS SHOWN.

TRACE THE HIGH EAVE PARAPET TRIM PROFILE ONTO THE BACK VERTICAL LEG OF THE RAKE PARAPET TRIM.

STEP 5: CUT THE RAKE PARAPET TRIM TO CREATE TABS AS SHOWN.

APPLY TUBE CAULK TO ALL VOIDS.

FASTEN THE TABS TO THE HIGH EAVE PARAPET TRIM WITH H1050 FASTENERS.

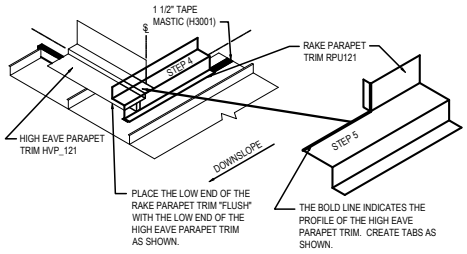

INSTALL WALL PANELS AND COPE CORNER TRIM
STEP 6

INSTALL THE WALL PANELS PER THE INSTRUCTIONS IN THE WALL PANEL DETAILS INCLUDED IN THIS SET OF ERECTION DRAWINGS.

COPE THE OUTSIDE CORNER TRIM (COB___) FLUSH WITH THE BOTTOM OF THE WALL PANELS ON BOTH THE SIDEWALL AND THE ENDWALL.

INSTALL THE OUTSIDE CORNER TRIM AS INDICATED IN THE WALL CORNER DETAIL.

NOTE THAT PANELS ARE SHOWN IN THIS DETAIL FOR REFERENCE ONLY. THE ACTUAL WALL PANEL PROFILE FOR THIS PROJECT MAY VARY.

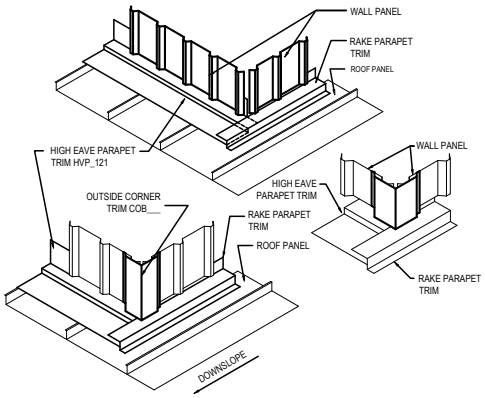

HIGH EAVE PARAPET LOW BUILDING EXTENDS
STEP 7 WALL PANEL - OPTION 1

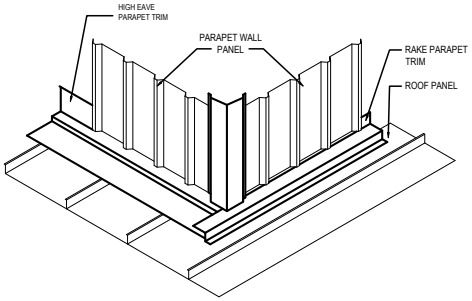

HIGH EAVE PARAPET LOW BUILDING EXTENDS
WALL BY OTHERS - OPTION 2

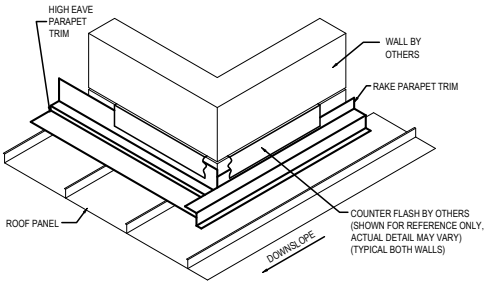

HIGH EAVE PARAPET- LOW EXTENDS

DETAIL SHOWN WITH WALL PANEL AND CORNER TRIM. MASONRY AND INSULATED WALL PANEL CONDITIONS SIMILAR.

EI7351

Detailer Notes:

1) N/A

EI7380 ABC - HIGH EAVE PARAPET WITH RAKE TERMINATION - INSIDE - VERTICAL RIB

Download the DWG file by clicking here.

HIGH EAVE PARAPET WITH RAKE TERMINATION

RAKE TERMINATION AT WALL
STEP 1

EXTEND THE RAKE TRIM TO STEEL LINE WHERE THE PROFILE WILL BE MITERED FLUSH WITH THE WALL. ATTACH THE RAKE TRIM END CAP **(H4000_)** AND RAKE END CAP **(RSCE)** INTO THE HIGH SIDE OF THE RAKE TRIM. FASTEN WITH POP RIVETS **(H1100)**.

HIGH EAVE PARAPET TRIM INSTALLATION
STEP 2

REFERENCE HIGH EAVE PARAPET DETAIL FOR TYPICAL PARAPET INSTALLATION. THE HIGH EAVE PARAPET TRIM SHOULD EXTEND ALL THE WAY OVER TO THE EDGE OF THE TOP HORIZONTAL LEG OF THE RAKE TRIM AS SHOWN. THE LOWER PORTION OF PARAPET TRIM WILL TERMINATE INTO BACK OF RAKE TRIM. BEND AND TAB AS SHOWN BELOW. USE POLYURETHANE TUBE CAULK **(H3152)** AND FASTEN THE PARAPET TRIM TO RAKE TRIM WITH **(H1050)** FASTENERS.

WALL PANEL INSTALLATION
STEP 3

INSTALL WALL PANEL ACCORDING THOSE DETAILS. SEAL VOIDS WITH POLYURETHANE TUBE CAULK **(H3152)**

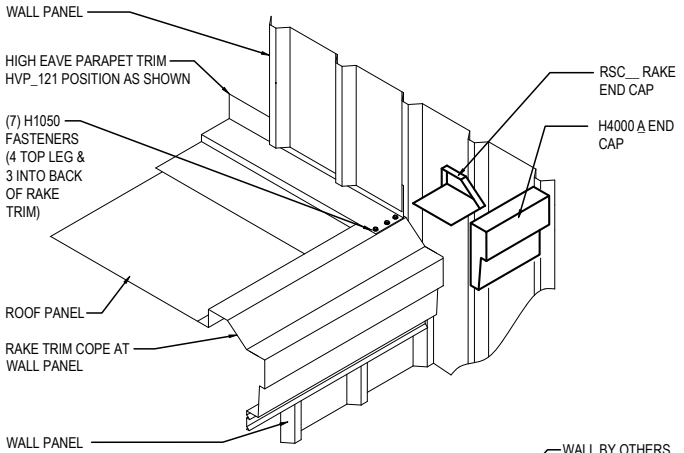

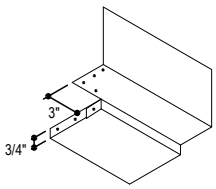

PARAPET TRIM TABS
(SHOWN OPPOSITE HAND FOR CLARITY)

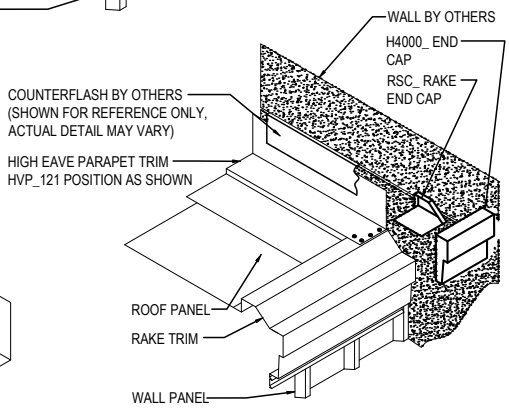

WALL BY OTHERS
(SIMILAR)

PARAPET TO RAKE TERMINATION

VERTICAL RIB ROOF WITH WALL PANEL
SEE WALL SHEETING ERECTION NOTES FOR WALL PANEL FASTENER LOCATIONS

EI7380

Detailer Notes:

1) N/A

EI7381 - HIGH EAVE PARAPET TO RAKE PARAPET - INSIDE - VERTICAL RIB

Download the DWG file by clicking here.

HIGH EAVE PARAPET TO RAKE PARAPET AT CORNER

HIGH EAVE PARAPET AT INSIDE CORNER PARAPET INSTALLATION

REFERENCE RAKE AND HIGH EAVE PARAPET DETAILS FOR TYPICAL PARAPET TRIM INSTALLATION.

THE RAKE PARAPET TRIM SHOULD EXTEND TO STEEL LINE. THIS WILL ALLOW THE HIGH EAVE PARAPET TRIM TO FORM A CORNER AS SHOWN BELOW.

NOTE: FIELD MITERING IS REQUIRED BEFORE INSTALLING THE HIGH EAVE PARAPET TRIM. SEE BELOW TO CREATE TABS ON THE HIGH EAVE PARAPET TRIM.

APPLY **POLYURETHANE TUBE CAULK (H3152)** TO THE BACK OF AND IN BETWEEN ALL TABS AND PLACE THE HIGH EAVE PARAPET TRIM OVER THE RAKE PARAPET TRIM AS SHOWN. ENSURE TRIMS SEAT WELL TOGETHER IN THE CORNER (NO GAPS) AND ALIGN WITH THE HIGH SIDE WALL. FASTEN THE TRIMS TOGETHER AS SHOWN BELOW IN THE CORDER.

THE TRIM MUST BE PROPERLY POSITIONED BEFORE TOUCHING THE MASTIC. MASTIC CANNOT BE REUSED.

ONCE INSTALLED, CAULK SEAMS TO ENSURE THERE ARE NO GAPS OR VOIDS.

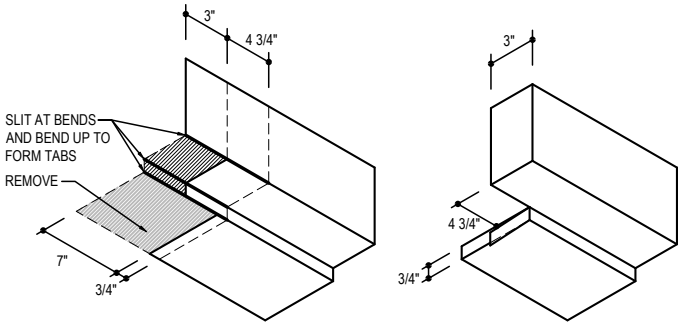

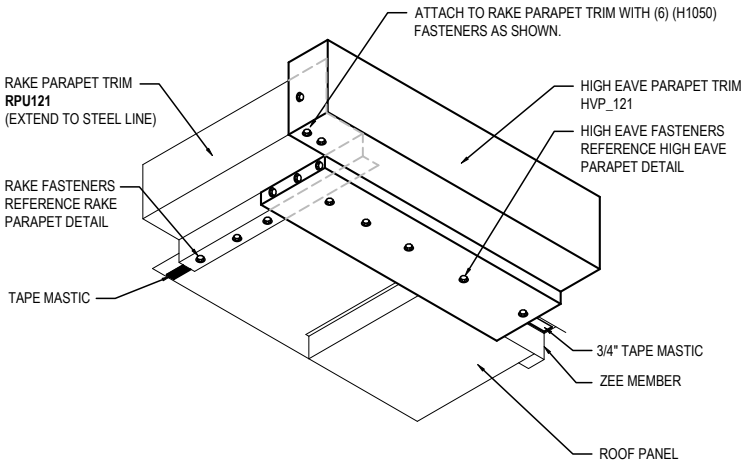

HE PARAPET TO RAKE PARAPET INSIDE CORNER

DETAIL SHOWN WITH ROOF AND WALL PANEL.
SEE WALL SHEETING ERECTION NOTES FOR WALL PANEL FASTENER LOCATIONS

EI7381

Detailer Notes:

1) N/A

EI7650 ABC - HIGH EAVE PARAPET WITH RAKE TERMINATION AT CORNER - OUTSIDE - TRAPEZOID

Download the DWG file by clicking here.

HIGH EAVE PARAPET WITH RAKE TERMINATION AT CORNER

RAKE TERMINATION AT WALL
STEP 1

EXTEND THE RAKE TRIM TO STEEL LINE WHERE THE PROFILE WILL LAP APPROXIMATELY 1" ON THE WALL CORNER TRIM THAT WILL BE INSTALLED LATER. ATTACH THE RAKE TRIM END CAP **(H4000_)** INTO THE HIGH SIDE OF THE RAKE TRIM. FASTEN WITH POP RIVETS **(H1100)**. DO NOT ATTACH RAKE TRIM TO WALL UNTIL AFTER CORNER TRIM IS INSTALL. RAKE TRIM WILL NEED TO BE ROLLED OUT TO SLIDE CORNER TRIM BEHIND FACE OF RAKE TRIM.

HIGH EAVE PARAPET TRIM INSTALLATION
STEP 2

REFERENCE HIGH EAVE PARAPET DETAIL FOR TYPICAL PARAPET INSTALLATION. THE HIGH EAVE PARAPET TRIM SHOULD EXTEND ALL THE WAY OVER TO THE EDGE OF THE TOP HORIZONTAL LEG OF THE RAKE TRIM AS SHOWN. BEND AND TAB AS SHOWN BELOW. USE POLYURETHANE TUBE CAULK **(H3152)** AND FASTEN THE PARAPET TRIM TO RAKE TRIM WITH **(H1050)** FASTENERS.

WALL PANEL & CORNER TRIM INSTALLATION
STEP 3

INSTALL WALL PANEL AND CORNER TRIM ACCORDING THOSE DETAILS. CORNER TRIM SHOULD EXTEND DOWN TO THE BOTTOM HORIZONTAL LEG OF THE RAKE TRIM BUT WILL NEED TO BE COPED AT THE UPPER PORTION OF THE RAKE TRIM. THE UPPER PORTION OF THE RAKE TRIM WILL NEED TO EXTEND INSIDE OF THE CORNER TRIM AS SHOWN. SEAL VOIDS WITH POLYURETHANE TUBE CAULK **(H3152)**

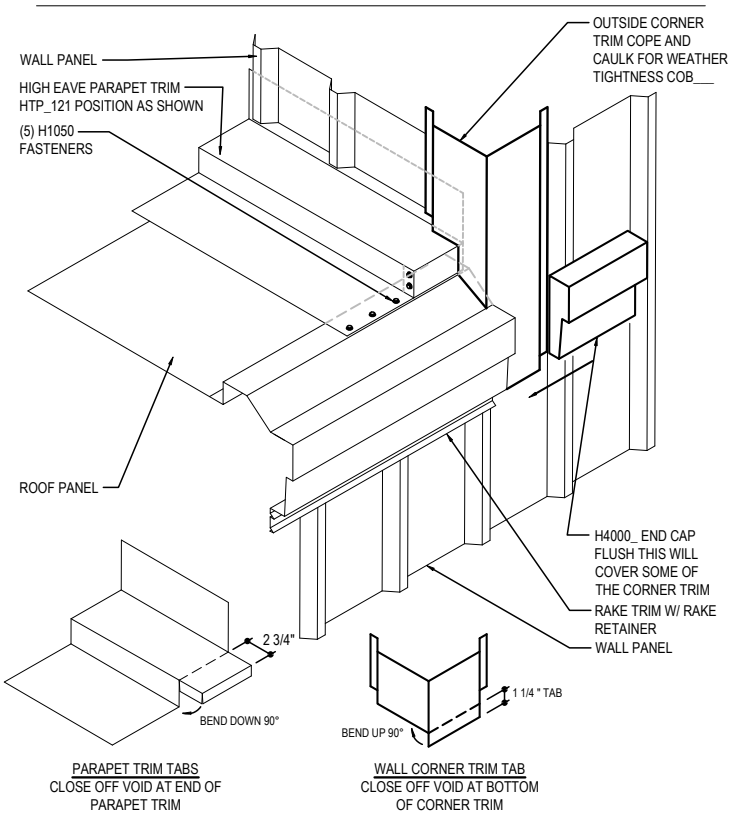

PARAPET TO RAKE TERMINATION

TRAPEZOIDAL ROOF WITH WALL PANEL
SEE WALL SHEETING ERECTION NOTES FOR WALL PANEL FASTENER LOCATIONS

EI7650

Detailer Notes:

1) N/A

EI7651 HIGH EAVE PARAPET TO RAKE PARAPET - OUTSIDE - TRAPEZOID

Download the DWG file by clicking here.

PREPARATION FOR HIGH EAVE PARAPET LOWER BUILDING EXTENDS

ROOF PANEL BACK-UP PLATES
STEP 1

INSTALL THE ROOF PANELS, BACK-UP PLATES AND OUTSIDE CLOSURES AS PER THE INSTRUCTIONS. AT THE PANEL THAT INTERSECTS THE CORNER, FIELD CUT THE SHOULDER OFF OF A BACK-UP PLATE AS SHOWN. FLATTEN THE BACK-UP PLATE TABS AS REQUIRED AS SHOWN.

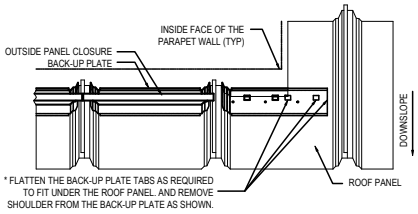

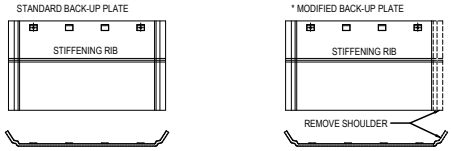

OUTSIDE PANEL CLOSURE INSTALLATION
STEP 2

FIELD CUT AN OUTSIDE PANEL CLOSURE TO THE PROPER LENGTH ADDING 4 3/4" PAST INSIDE FACE OF PARAPET WALL AND ADD 1 1/2" TO FORM A VERTICAL TAB. THE TOP HORIZONTAL LEG WILL BE TRIMMED OFF. (SEE BELOW) THIS WILL CLOSE OFF TO THE INSIDE OF THE RAKE PARAPET TRIM.

APPLY PRECUT OUTSIDE CLOSURE MASTIC TO THE TOP OF PANEL TAKING CARE TO MOLD TO CONTOUR OF PANEL. AND APPLY BUTYL TUBE CAULK (H3151) ALONG MASTIC AT PANEL RIB. (FILL ANY GAPS WHERE THE END DAMS INTERSECT). INSTALL OUTSIDE PANEL CLOSURE TAKING CARE TO MAKE SURE MASTIC IS COMPRESSED AND THERE ARE NO GAPS AS DIRECTED IN THE BASIC INSTALLATION DETAIL.

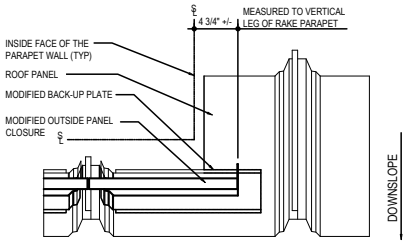

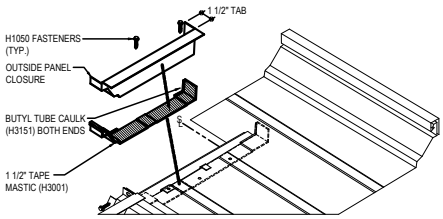

HIGH EAVE PARAPET TRIM INSTALLATION
STEP 3

BEFORE INSTALLING THE HIGH EAVE PARAPET TRIM **(HTP_121)**, PLACE TAPE MASTIC AND CAULK ALONG THE FULL LENGTH OF THE TOP LEG OF THE OUTSIDE PANEL CLOSURES AS INDICATED IN THE BASIC INSTALLATION DETAIL AND BELOW.

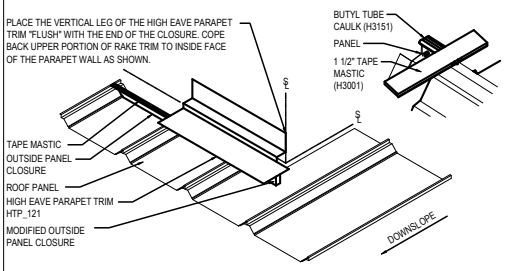

RAKE PARAPET TRIM MOCK UP TO CUT INSTALLATION
STEP 4

BEFORE INSTALLING THE RAKE PARAPET TRIM (RPU121), PLACE TAPE MASTIC ON TOP OF THE ROOF PANEL, FROM THE LOW END OF THE RAKE PARAPET TRIM TO THE HIGH END OF THE PANEL **(DO NOT REMOVE THE PAPER BACK FROM THE MASTIC UNTIL THE TABS IN THE RAKE PARAPET TRIM ARE CREATED).**

PLACE THE LOW END OF THE RAKE PARAPET TRIM "FLUSH" WITH THE LOW END OF THE HIGH EAVE PARAPET TRIM AS SHOWN. TRACE THE HIGH EAVE PARAPET TRIM PROFILE ONTO THE BACK VERTICAL LEG OF THE RAKE PARAPET TRIM. CUT THE RAKE PARAPET TRIM TO CREATE TABS AS SHOWN.

APPLY TUBE CAULK TO ALL VOIDS. FASTEN THE TABS TO THE HIGH EAVE PARAPET TRIM WITH H1050 FASTENERS.

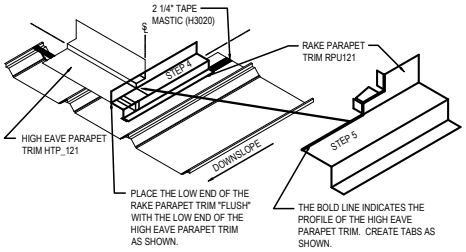

INSTALL WALL PANELS AND COPE CORNER TRIM
STEP 5

INSTALL THE WALL PANELS PER THE INSTRUCTIONS IN THE WALL PANEL DETAILS INCLUDED IN THIS SET OF ERECTION DRAWINGS.

COPE THE OUTSIDE CORNER TRIM (COB___) FLUSH WITH THE BOTTOM OF THE WALL PANELS ON BOTH THE SIDEWALL AND THE ENDWALL.

INSTALL THE OUTSIDE CORNER TRIM AS INDICATED IN THE WALL CORNER DETAIL.

NOTE THAT PANELS ARE SHOWN IN THIS DETAIL FOR REFERENCE ONLY. THE ACTUAL WALL PANEL PROFILE FOR THIS PROJECT MAY VARY.

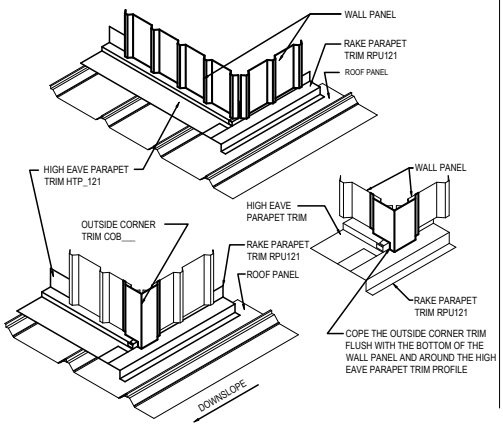

HIGH EAVE PARAPET LOW BUILDING EXTENDS
STEP 7 WALL PANEL - OPTION 1

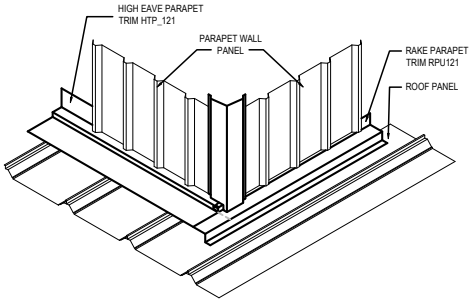

HIGH EAVE PARAPET LOW BUILDING EXTENDS
WALL BY OTHERS - OPTION 2

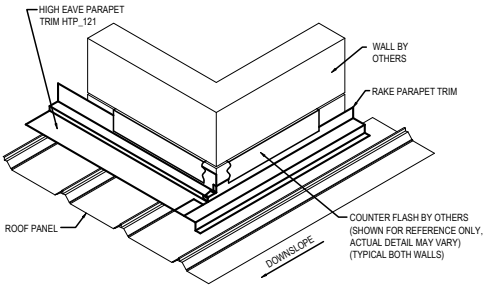

HIGH EAVE PARAPET- LOW EXTENDS

DETAIL SHOWN WITH ROOF PANEL, WALL PANEL, AND CORNER TRIM. MASONRY AND INSULATED WALL PANEL CONDITIONS SIMILAR.

EI7651

Detailer Notes:

1) N/A

EI7680 ABC - HIGH EAVE PARAPET WITH RAKE TERMINATION - INSIDE - TRAP

Download the DWG file by clicking here.

HIGH EAVE PARAPET WITH RAKE TERMINATION

RAKE TERMINATION AT WALL
STEP 1

EXTEND THE RAKE TRIM TO STEEL LINE WHERE THE PROFILE WILL BE MITERED FLUSH WITH THE WALL. ATTACH THE RAKE TRIM END CAP **(H4000_)** AND RAKE END CAP **(RSCE)** INTO THE HIGH SIDE OF THE RAKE TRIM. FASTEN WITH POP RIVETS **(H1100)**.

HIGH EAVE PARAPET TRIM INSTALLATION
STEP 2

REFERENCE HIGH EAVE PARAPET DETAIL FOR TYPICAL PARAPET INSTALLATION. THE HIGH EAVE PARAPET TRIM SHOULD EXTEND ALL THE WAY OVER TO THE EDGE OF THE TOP HORIZONTAL LEG OF THE RAKE TRIM AS SHOWN. THE LOWER PORTION OF PARAPET TRIM WILL TERMINATE INTO BACK OF RAKE TRIM. BEND AND TAB AS SHOWN BELOW. USE POLYURETHANE TUBE CAULK **(H3152)** AND FASTEN THE PARAPET TRIM TO RAKE TRIM WITH **(H1050)** FASTENERS.

WALL PANEL INSTALLATION
STEP 3

INSTALL WALL PANEL ACCORDING THOSE DETAILS. SEAL VOIDS WITH POLYURETHANE TUBE CAULK **(H3152)**

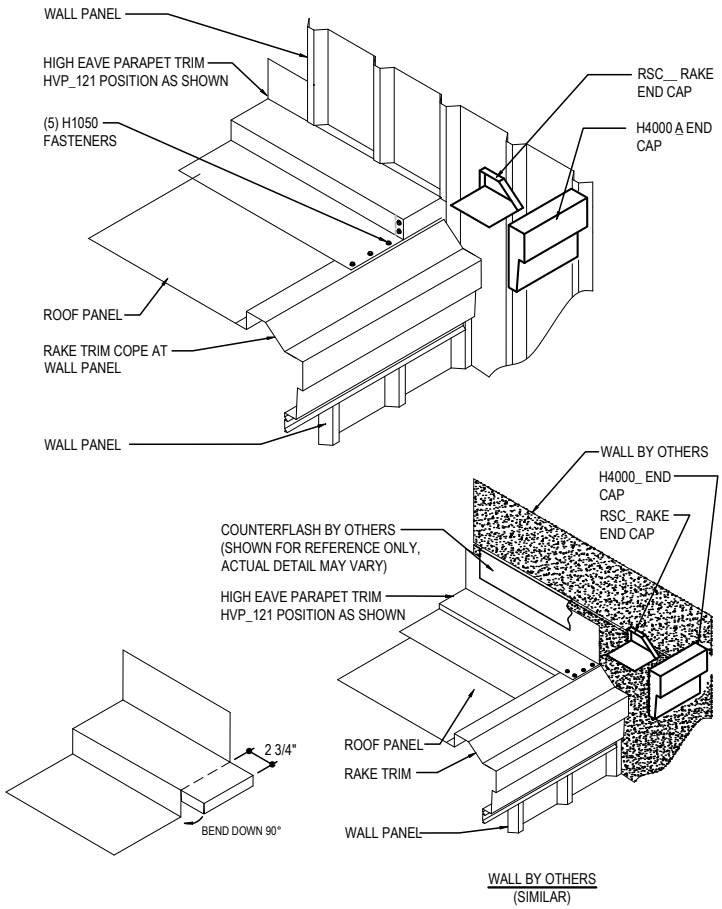

PARAPET TO RAKE TERMINATION

VERTICAL RIB ROOF WITH WALL PANEL
SEE WALL SHEETING ERECTION NOTES FOR WALL PANEL FASTENER LOCATIONS

EI7680

Detailer Notes:

1) N/A

EI7681 - HIGH EAVE PARAPET TO RAKE PARAPET - INSIDE - TRAPEZOID

Download the DWG file by clicking here.

HIGH EAVE PARAPET TO RAKE PARAPET AT CORNER

HIGH EAVE PARAPET AT INSIDE CORNER PARAPET INSTALLATION

REFERENCE RAKE AND HIGH EAVE PARAPET DETAILS FOR TYPICAL PARAPET TRIM INSTALLATION.

THE RAKE PARAPET TRIM SHOULD EXTEND TO END OF ROOF PANEL. THIS WILL ALLOW THE HIGH EAVE PARAPET TRIM TO FORM A CORNER AS SHOWN BELOW.

NOTE: FIELD MITERING IS REQUIRED BEFORE INSTALLING THE HIGH EAVE PARAPET TRIM. SEE BELOW TO CREATE TABS ON THE HIGH EAVE PARAPET TRIM.

APPLY **POLYURETHANE TUBE CAULK (H3152)** TO THE BACK OF AND IN BETWEEN ALL TABS AND PLACE THE HIGH EAVE PARAPET TRIM OVER THE RAKE PARAPET TRIM AS SHOWN. ENSURE TRIMS SEAT WELL TOGETHER IN THE CORNER (NO GAPS) AND ALIGN WITH THE HIGH SIDE WALL. FASTEN THE TRIMS TOGETHER AS SHOWN BELOW IN THE CORDER.

THE TRIM MUST BE PROPERLY POSITIONED BEFORE TOUCHING THE MASTIC. MASTIC CANNOT BE REUSED.

ONCE INSTALLED, CAULK SEAMS TO ENSURE THERE ARE NO GAPS OR VOIDS.

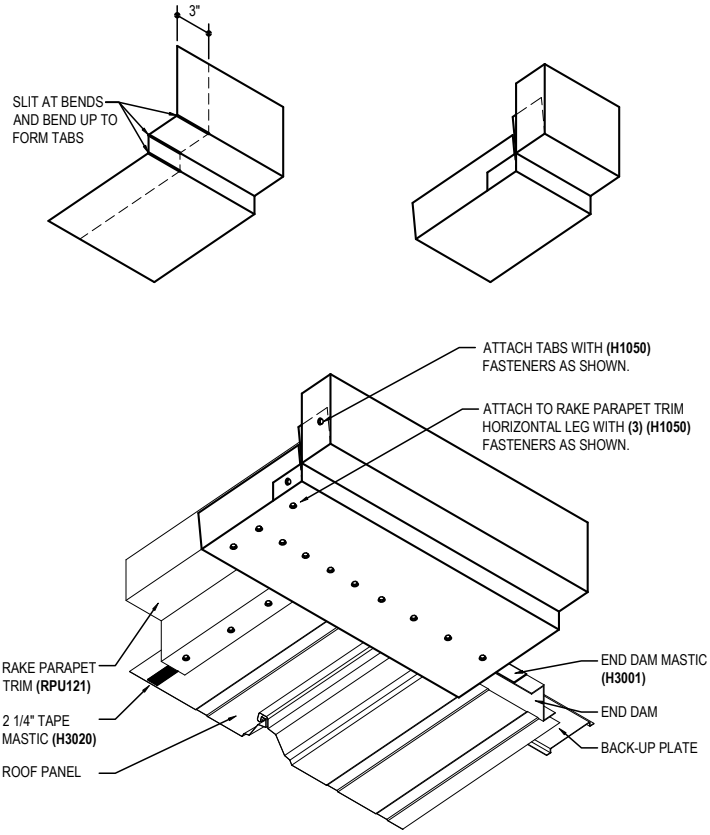

HE PARAPET TO RAKE PARAPET TERMINATION

DETAIL SHOWN WITH ROOF AND WALL PANEL.
SEE WALL SHEETING ERECTION NOTES FOR WALL PANEL FASTENER LOCATIONS

EI7681

Detailer Notes:

1) N/A